# TIME
## CAMERA
## Instruction Manual

This is a free gift from TIME Magazine and not for sale.

C

### OPEN CAMERA BACK

1. Pull up rewind knob until camera back opens.

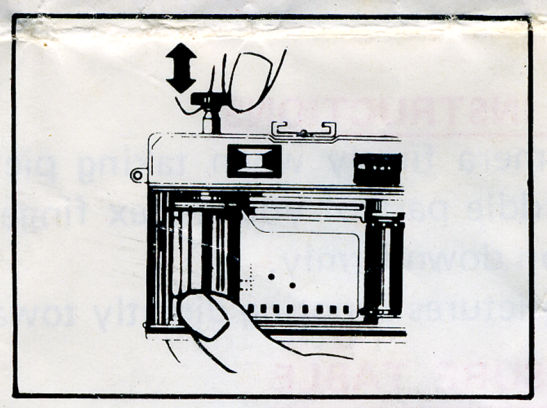

### LOADING THE FILM

1. Place film cassette into chamber.
2. Push down the rewind knob, making sure the slot engages in the top of the film cassette.
3. Pull out the end of the film enough to insert it into one of the slots of the film advance shaft.

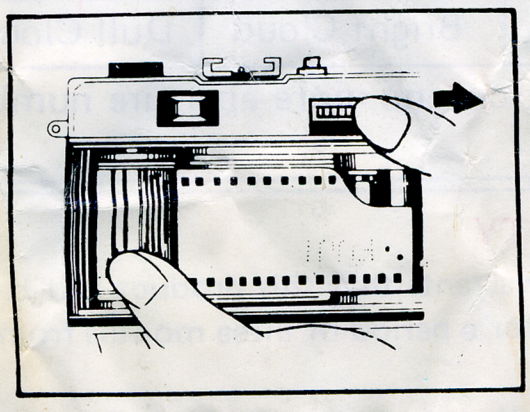

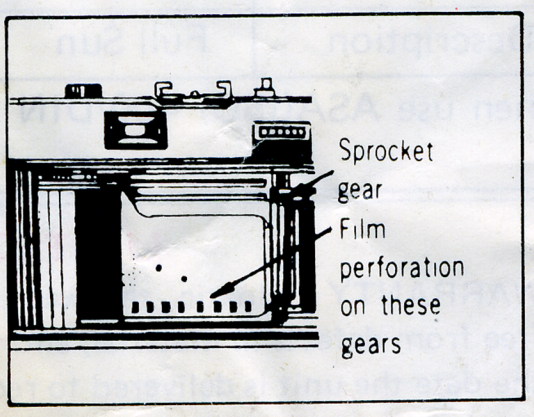


4. Now wind the film on by turning the film advance wheel to the right, making sure that the sprockets of the film advance shaft engage in the sprocket holes of the film. Rewind knob should be in the down position and engaged into film cassette. Depress the shutter release and wind on the film, then repeat the operation to ensure the film is properly engaged.
5. Depress the shutter release button and advance film by turning the film advance wheel in a counterclockwise direction.

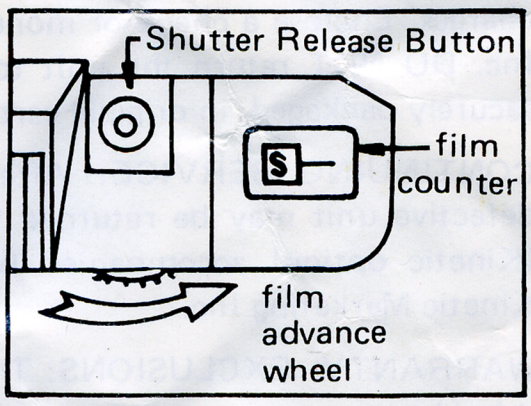


### UNLOADING THE FILM

6. Press the rewind button located on the bottom of camera. Keep this button pressed while turning the rewind knob in a clockwise direction until the film is back into the cassette. Pull up the rewind knob to release the film cassette out from the camera.

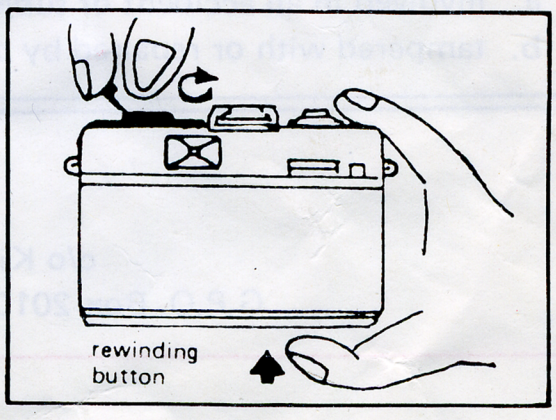

## USING YOUR CAMERA

The fixed focus lens is set at a distance of approximately 10 feet and requires no focusing. The aperture is selected by lining up the red arrow on the lens mounting with the required symbol— full sun/ shiny/ bright cloud/ dull cloud compose your picture in the viewfinder and gently depress the shutter release with the tip of your forefinger. Be sure to hold camera steady. Do not shake the camera when taking pictures.

## FLASH PICTURES

Secure the flashgun in the hot shoe fitting at the top of the camera. Make sure the hot-shoe makes proper contact. For flash pictures, the lens aperture should be set at (6) (dull/cloud) for ASA (ISO) 100/DIN 21 Film and (8) (bright cloud) for ASA (ISO) 400/DIN 27 Film.

## SPECIFICATIONS

| | |
|---|---|
| Size of Film: | (35mm standard film) 24mm x 36mm |
| Lens: | 50mm single lens, fixed-focus |
| Indication: | (Full Sun) (Shiny) |
| For Exposure: | (Bright Cloud) (Dull Cloud) |
| Viewfinder: | Direct finder |
| Film Reeling: | Reeling in from front side of the film. |
| Film Rewind: | With a handle to rewind film back into cassette. |
| ~~Film Setting:~~ | ~~From back cover.~~ |

## ADDITIONAL INSTRUCTIONS

1. Hold the camera firmly when taking pictures using both hands and by using the middle part of your index finger, rather than the tip, press the shutter button down firmly.
2. Do not take pictures shooting directly towards light.

## SIMPLE EXPOSURE TABLE

[FOR ASA(ISO) 100/DIN 21 Film]

| Exposure Indication | f: 16 | f: 11 | f: 8 | f: 6 |
|---|---|---|---|---|
| Weather Indication | | | | (use flash) |
| Description | Full Sun | Shiny | Bright Cloud | Dull Cloud |

*When use ASA(ISO) 400/DIN 27 Film, Set on one more aperture number.

## LIMITED WARRANTY

WARRANTY: Kinetic, the warrantor, hereby warrants that this product will be free from defects in material, and workmanship for a period of three months from the date the unit is delivered to recipient.

CLAIM: Within the warranty period described above, if the unit is defective in workmanship or material, the warrantor will repair or replace the product without charge. After three months and up to one year, the product will be repaired or replaced without charge with the exception of handling and return shipping charges. Enclose a check or money order for $5.00 payable to Kinetic Marketing Inc. DO NOT return the unit to TIME Magazine. Return to the address below, securely packaged, in original carton if possible.

CONTINUING SERVICE: After the one-year limited warranty period, any defective unit may be returned to the address below for replacement or repair (Kinetic option) accompanied by a $7.00 check or money order payable to Kinetic Marketing Inc.

WARRANTY EXCLUSIONS: This warranty shall not apply to normal wear or if it has been:

a. involved in an accident or subject to misuse or neglect;
b. tampered with or repaired by unauthorized repair centers.


**TIME**
**CAMERA**
c/o Kinetic Marketing Inc.
G.P.O. Box 2010, New York, New York 10116